SMARTLOCK QUICK SETUP GUIDE

SmartLock with DX2-DH2C2

Model Number: DX2-DH2C2

Raritan's SmartLock is an electronic door access and control system for all types of data center enclosures.

Supported Components

DX2-DH2C2 door handle controller supports the following components:

PDU	PX3	
	PX3TS	
	PXC	
	SRC	
	Legrand PDU	
Xerus	3.4.20 and up	
Door Handles	Southco H3-EM-60-100	Emka Agent E
	Southco H3-EM-62-100	Emka 1150-U5x
	Southco H3-EM-64-100	Dirak MLR1000
	Southco H3-EM-65-100	Dirak MLR2X00
	Southco H3-EM-66-100	
	Southco H3-EM-67-100	
	Southco H3-EM-68-100	

Restrictions for DX2-DH2C2

- Always connect DX2-DH2C2 directly to the sensor port. If you are cascading with other sensors, the DX2-DH2C2 must be in the first position, directly connected to the sensor port.
- Max. of 1 DX2-DH2C2 with up to 2 electronic door handles per PX3 Sensor port
- Max. cable length PDU to DX2-DH2C2: 5m
- Max. cable length DX2-DH2C2 to door handle: 4m
- No support for hot-plugging door handles. Door handle must not be plugged or unplugged from DX2-DH2C2 while contacts are powered.

  Risk of equipment damage.

More Info

Raritan Product Support: https://www.raritan.com/support/product/px3

DX2-DH2C2 Installation

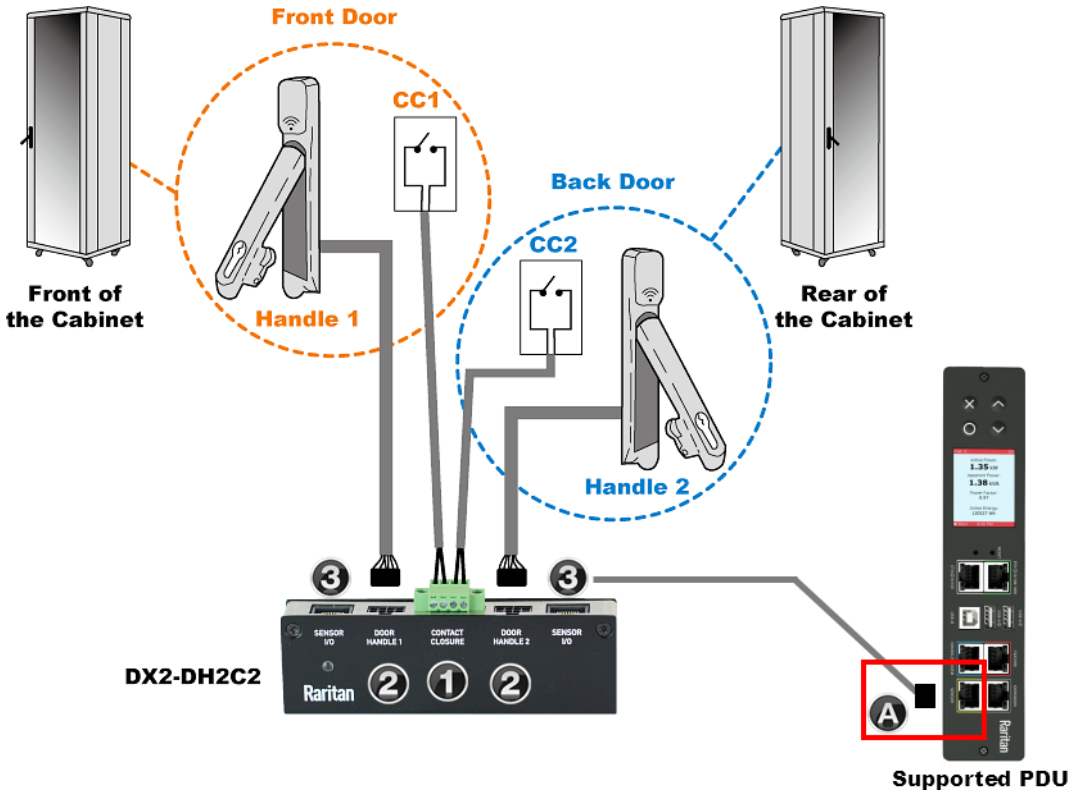

3	**SENSOR I/0** RJ-45 ports Use a standard category cable to connect to the PX3, PX3TS, PXC, SRC, or Legrand PDU Sensor Port: A
2	**DOOR HANDLE 1 - DOOR HANDLE 2** Electronic door handle ports Use wiring provided with your door handles. Connect the 8-pin connector end to the door handle port.
1	**CONTACT CLOSURE** Contact closure sensor channels CC sensors and wiring not included. Connect CC sensors according to their instructions.

Bracket Installation

You can install the bracket accompanying DX2-DH2C2 in order to hang or fasten it properly on an object or position. The bracket can be installed either onto the bottom of DX2-DH2C2 or onto one of its sides.

- **Bracket installed onto DX2-DH2C2's bottom:**

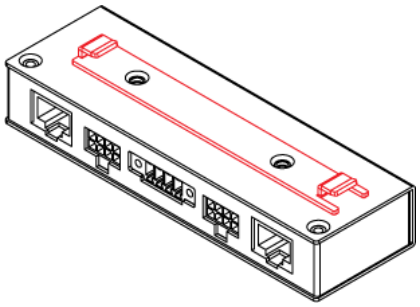

- **Bracket installed onto the side of DX2-DH2C2:**

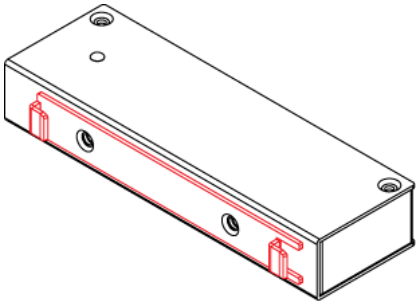

Next Steps

Once the physical connections are complete, login to your PX PDU to use door handle features in the web interface.

Web Configuration

Peripherals

- Click Peripherals in the Main menu to view the sensors that have been discovered. Upon discovery, the Main menu also adds two new menu options: SmartLock and Card Readers.
- In the Peripheral Devices page, two door handles, door locks, and doors are added automatically.

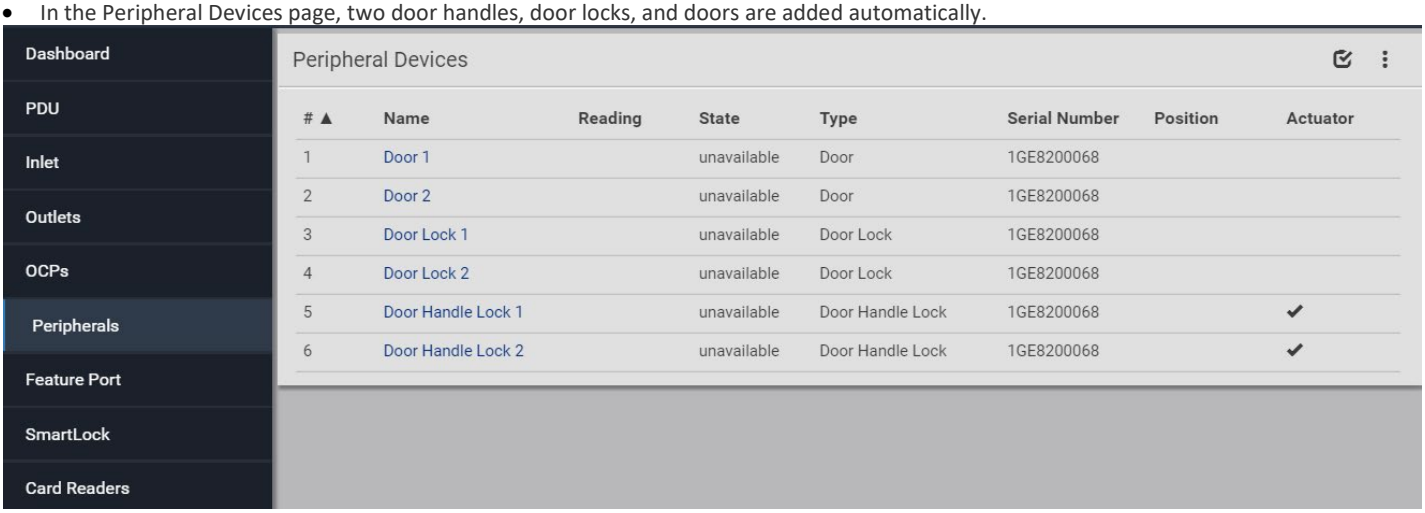

# ▲	Name	Reading	State	Type	Serial Number	Position	Actuator
1	Door 1		unavailable	Door	1GE8200068		
2	Door 2		unavailable	Door	1GE8200068		
3	Door Lock 1		unavailable	Door Lock	1GE8200068		
4	Door Lock 2		unavailable	Door Lock	1GE8200068		
5	Door Handle Lock 1		unavailable	Door Handle Lock	1GE8200068		✔
6	Door Handle Lock 2		unavailable	Door Handle Lock	1GE8200068		✔

SmartLock

- Click Smart Lock in the Main menu to open the Door Handle options.
- Smart Lock Controller section on top displays the physical connection to the DX2-DH2C2.
- Door Handle 1 and Door Handle 2 correspond to the labels on the sensor.

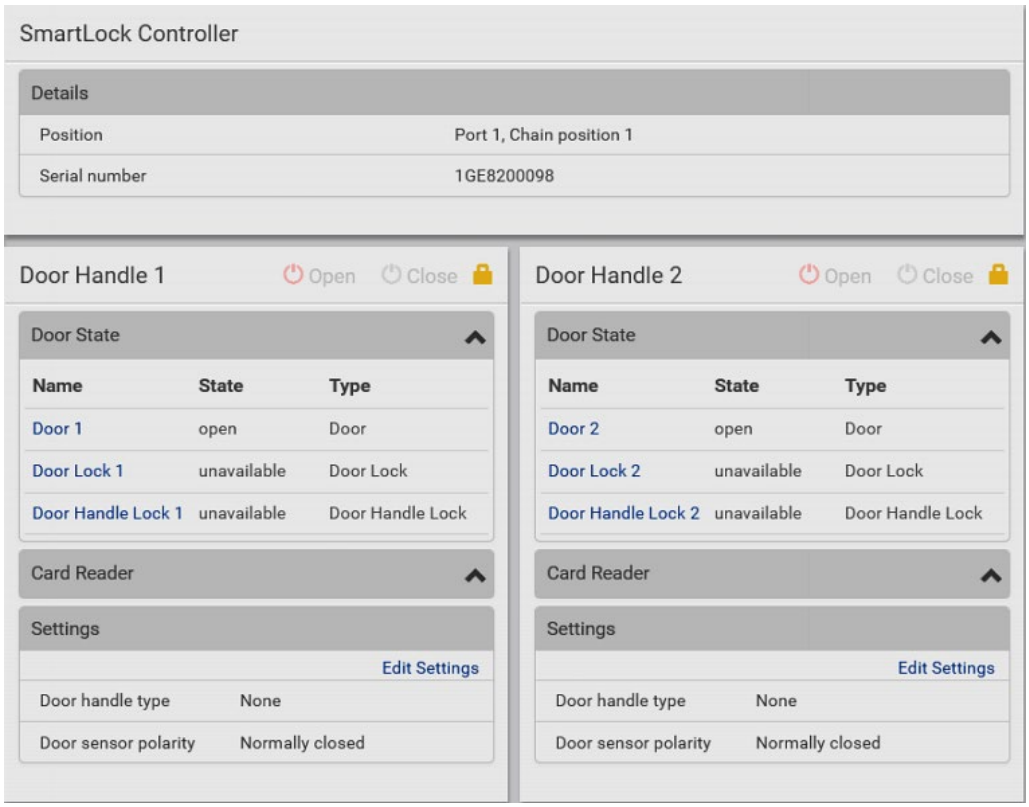

Settings

- Click Edit settings.
- Door Handle Type: Select your door handle's model.
  - If your specific Southco H3-EM model is listed, select it. For all other supported Southco H3-EM models, select "Southco H3-EM".

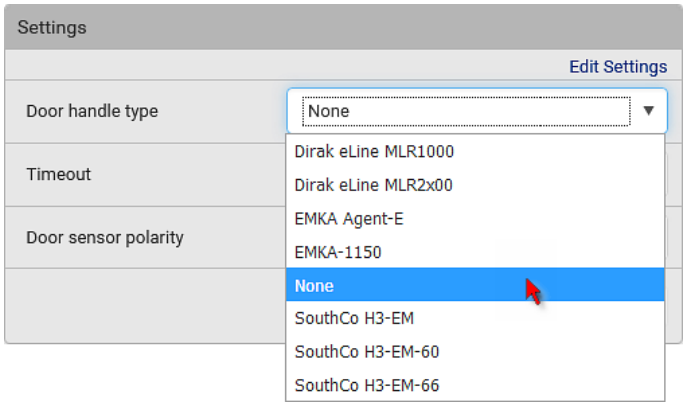

- Timeout: Specify how long the **door handle lock** can remain open after someone opens the door handle via a smart card or via remote control using the software. When the timeout expires, the door handle lock will be automatically closed. Default is 600 seconds (that is, 10 minutes).
- Door Sensor Polarity: Choose the correct setting based on the type of contact closure sensors used to monitor the door:
  - Normally closed: The contact is closed (conducting) when the door is closed and open (not conducting) when the door is open. **Default**.

- Normally open: The contact not conducting when the door is closed and conducting when the door is open.

Note: For both normally closed and normally open sensors, the reported state is "alarmed" when the door is open and "normal" when the door is closed.

- Save your changes.
- Once the Door Handle State and Type is detected, the information populates in Door state section.

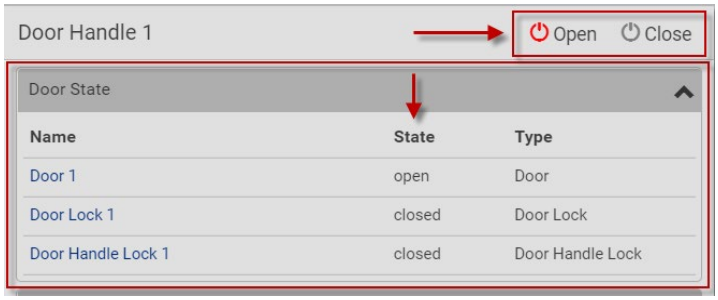

- Optional: You can rename each Door Handle component by clicking the item and editing settings.
- After these configurations, return to the Peripherals Devices page. This page now displays state, type and Position options for each configured component.

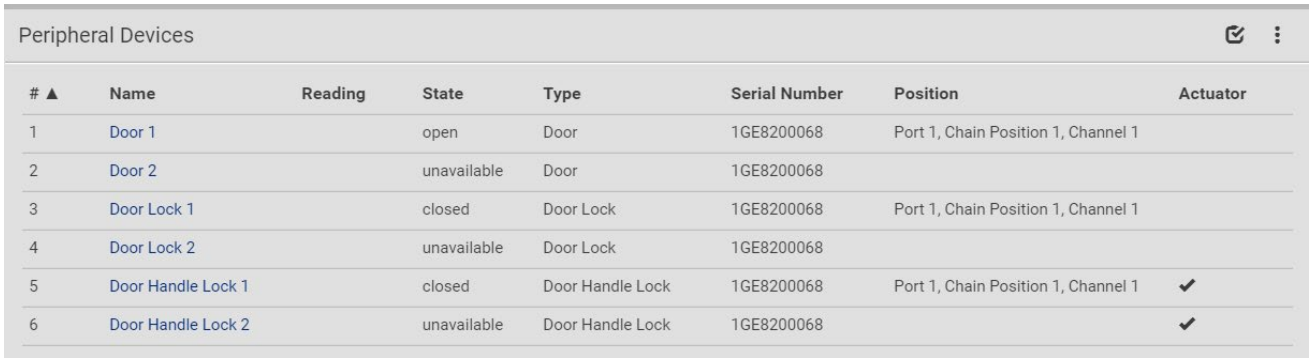

Optional Setting: Unlock Front and Rear Doors Simultaneously

By default, the PDU configuration is set to unlock only one lock at a time to preserve power. You must change the Active Powered Dry Contact Limit to 2 if you require unlocking the front and rear door simultaneously at the rack.

- Click PDU in the Main menu. Click Edit and change the setting as shown.

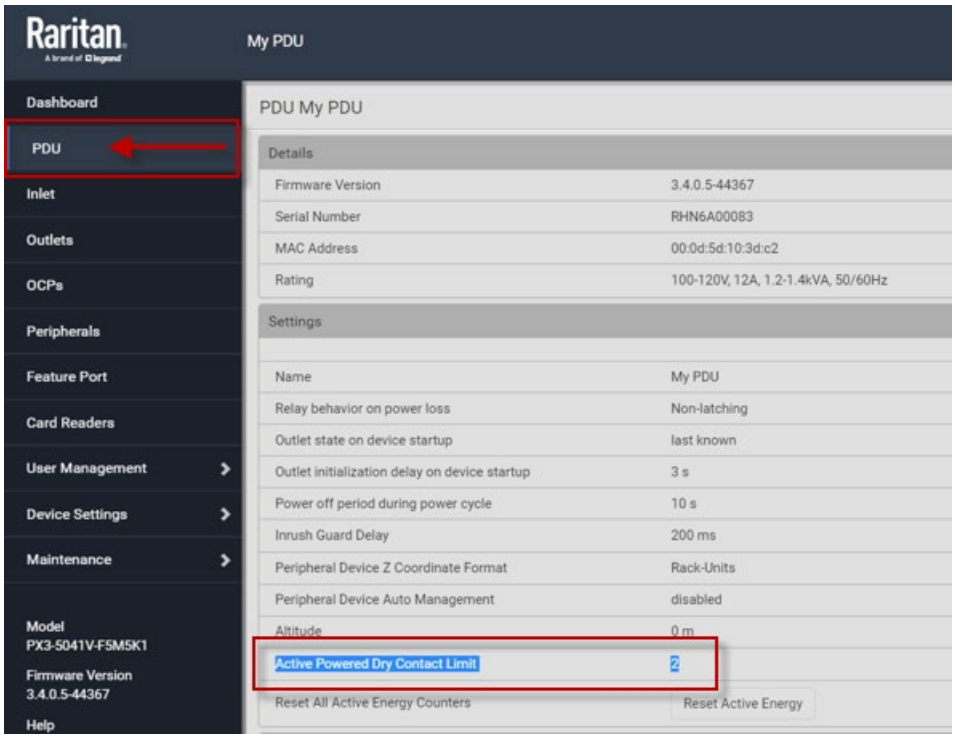

Note: With some door handles, while you open and close one door handle, the second door handle is powered off briefly to conserve power. Once the first door handle is closed and locked, power resumes to the second handle and it is ready to use.

Power IQ Integration

If you are integrating SmartLock with Power IQ, you will need to do additional configurations to complete integration.

Power IQ relies on traps sent by your PDU to get the card reader events. Configure your PDU to forward card reader management related events to Power IQ. See the online help for your PDU for further instructions on SNMP Settings and Event Rule Settings.

Once the configurations described in this guide are complete, Power IQ will have the required infrastructure support to implement a solution with card authorization for unlocking cabinet doors. The following additional configurations are required on Power IQ to accomplish this:

- Card Access Management: Add and assign cards to users
- Add PDUs in Power IQ
- Data Center (EDM) association of PDU, Rack, and Door
- Door Access Management: Associating the card reader to the rack and user authorization

See the Power IQ help for further instructions: https://www.sunbirddcim.com/

SmartLock Kits

SML-KIT-01: (2) Electronic door handles (HANDLE-E) (1) Contact Closure Sensor with powered contacts (DX-PD2C5) (2) Mechanical override keys Cables and connectors included	SML-KIT-SCO-67-2D: (2) Electronic door handles (SML-SCO-H3EM-67) (1) Contact Closure Sensor with powered contacts (DX2-DH2C2) (2) Mechanical override keys Cables and connectors included
SML-KIT-CARD-01: SML-KIT-01 packaged with Smart Card reader SML-HFC-READER: (1) USB Modular RFID Card reader with USB cable and mounting bracket and screws	SML-KIT-EKA-AGE-1D: (1) Electronic door handle (SML-EKA-AGENT-E) (1) Contact Closure Sensor with powered contacts (DX2-DH2C2) (2) Mechanical override keys Cables and connectors included
SML-KIT-SCO-60-2D: (2) Electronic door handles (SML-SCO-H3EM-60) (1) Contact Closure Sensor with powered contacts (DX2-DH2C2) (2) Mechanical override keys Cables and connectors included	SML-KIT-EKA-AGE-2D: (2) Electronic door handles (SML-EKA-AGENT-E) (1) Contact Closure Sensor with powered contacts (DX2-DH2C2) (2) Mechanical override keys Cables and connectors included
SML-KIT-SCO-66-1D: (1) Electronic door handle (SML-SCO-H3EM-66) (1) Electronic door handle (SML-SCO-H3EM-60) (1) Contact Closure Sensor with powered contacts (DX2-DH2C2) (2) Mechanical override keys Cables and connectors included	SML-KIT-EKA-AGE-1DL: (1) Electronic door handle (SML-EKA-AGENT-E-L) (1) Contact Closure Sensor with powered contacts (DX2-DH2C2) (2) Mechanical override keys Cables and connectors included
SML-KIT-SCO-66-2D: (2) Electronic door handles (SML-SCO-H3EM-66) (1) Contact Closure Sensor with powered contacts (DX2-DH2C2) (2) Mechanical override keys Cables and connectors included	SML-KIT-EKA-AGE-2DL: (2) Electronic door handles (SML-EKA-AGENT-E-L) (1) Contact Closure Sensor with powered contacts (DX2-DH2C2) (2) Mechanical override keys Cables and connectors included
SML-KIT-SCO-67-1D: (1) Electronic door handle (SML-SCO-H3EM-67) (1) Electronic door handle (SML-SCO-H3EM-60) (1) Contact Closure Sensor with powered contacts (DX2-DH2C2) (2) Mechanical override keys Cables and connectors included	